7M 7000

1770 RPM

ENCLOSED IMPELLER 17BA92

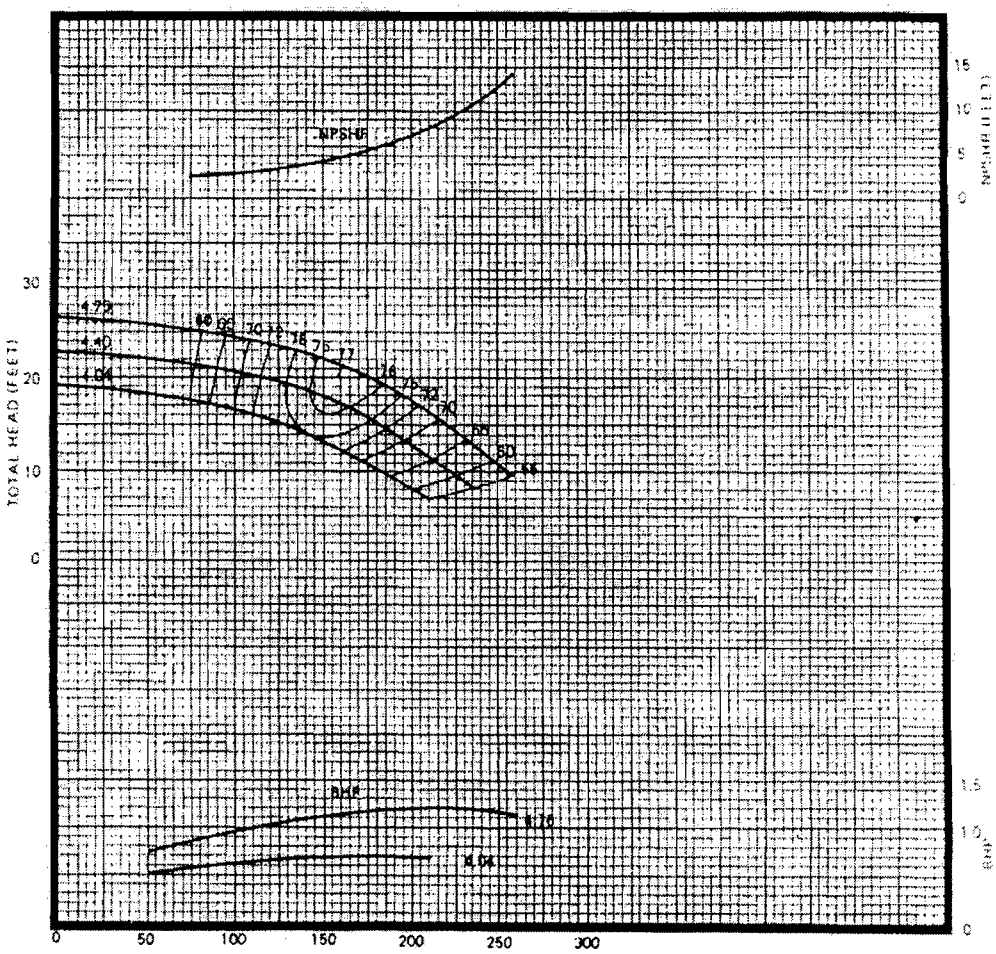

EFFICIENCY CORRECTIONS(1)

NUMBER OF STAGES	EFFICIENCY CHANGE
1	-7.0 POINTS
2	-4.0 POINTS
3	-2.0 POINTS
4	-1.0 POINTS
5	NO CHANGE
6 OR MORE	NO CHANGE

BOWL MATERIAL	EFFICIENCY CHANGE
CAST IRON	-4.0 POINTS
ENAMELED C.I.	NO CHANGE

IMPELLER MATERIAL	EFFICIENCY CHANGE
CAST IRON	-1.0 POINTS
BRONZE	NO CHANGE
ENAMELED C.I.	+2.0 POINTS

(1) Refer to "Application and Reference Data" for head correction.

DIMENSIONS (Inches)

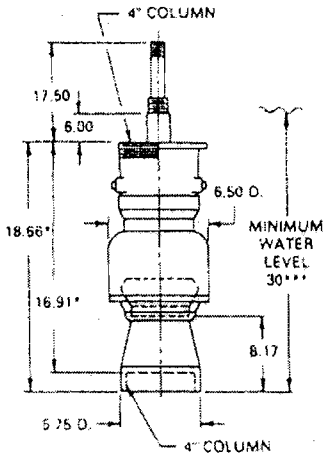

*Add 5.19 for each additional stage

TECHNICAL DATA

DATA	VALUE
MAXIMUM OPERATING SPEED	3600 RPM
MAXIMUM NUMBER OF STAGES	40**
PUMP SHAFT DIAMETER	1 IN
IMPELLER EYE AREA	6.05 SQ. IN.
MAXIMUM SPHERE SIZE	50 IN.
K_t (THRUST FACTOR)	2.56 LBS./FT.
K_r (ROTOR WT. PER STAGE)	4.40 LBS.
BOWL WT. (FIRST STAGE)	21 LBS.
BOWL WT. (EACH ADD'L. STAGE)	22 LBS.
ALLOWABLE SHAFT STRETCH	.39 IN.**
WK^2 (FIRST STAGE)	29 LBS.-FT.^{2}
WK^2 (EACH ADD'L. STAGE)	28 LBS.-FT.^{2}
BOWL RING CLEARANCE	.014-.016 IN.

** These are nominal values. Refer to "Application and Reference Data" for information further limiting or extending these values.

*** This value is the minimum submergence required to prevent vortexing only. This value may need to be increased to provide adequate NPSHA