RATING CURVES
(60 CYCLE)

12HH-200
1160 RPM

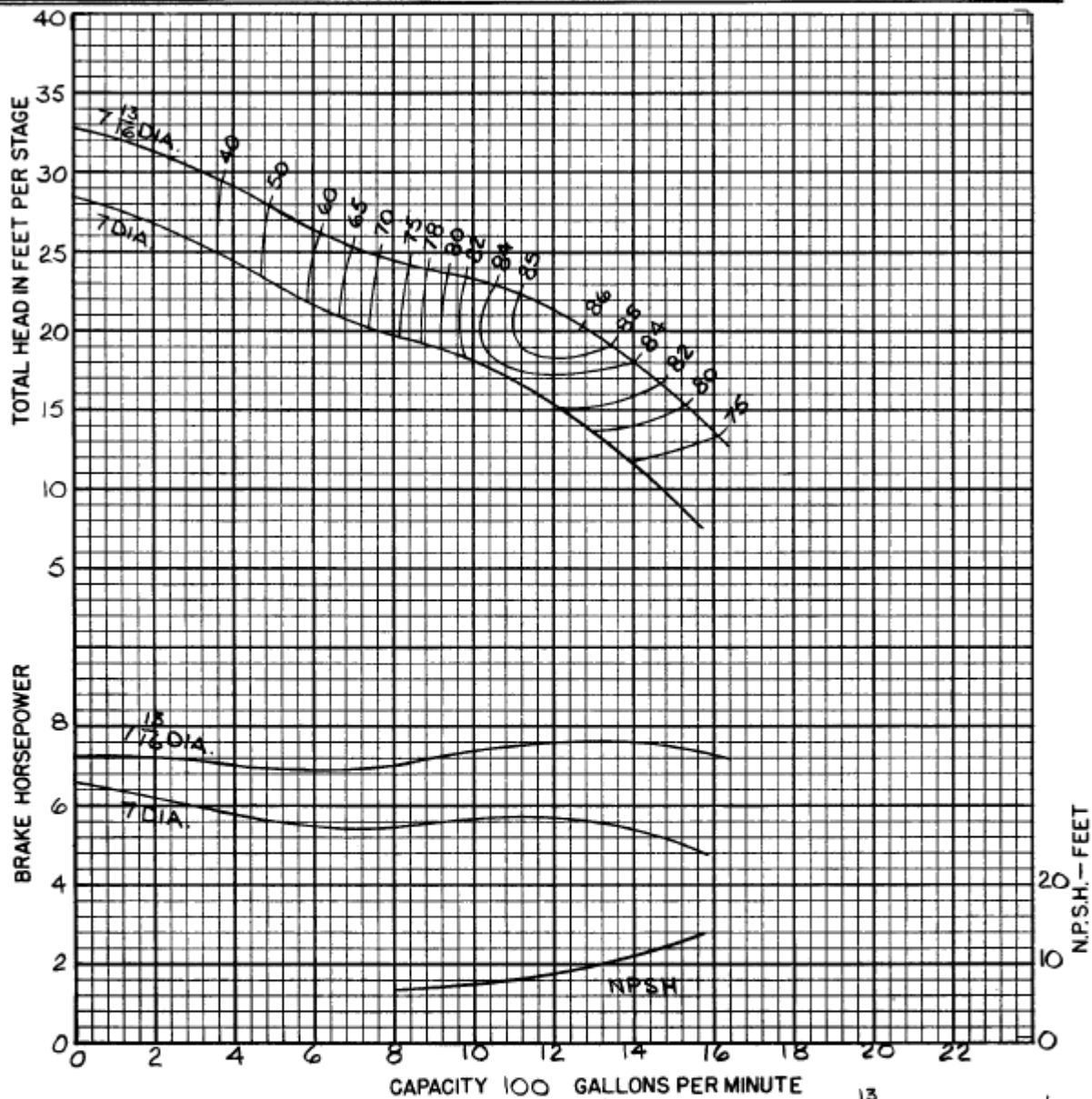

Efficiency shown is for 2 stages with standard materials. For fewer stages or other materials change efficiency as shown.

No. of stages	Eff. change	MATERIAL	Eff. change
6	-2	Impeller-bronze	—
5	-2	Impeller-c.i.	-1
4	-2	Impeller-c.i. enm.	+1.5
3	-1	Bowl-c.i. enm.	—
2	—	Bowl-cast iron	-2
1	-3	Bowl-bronze	-1.5

Standard materials	
Impeller — bronze	
Bowl — cast iron / enamelled	
Thrust factor	14.5
Rotor wt. per stage (lbs.)	27
Bowl wt. 1st stage (lbs.)	275
Bowl wt. add'l. stage (lbs.)	101
Max. bowl horsepower	160
Impeller eye area (sq. in.)	33.9

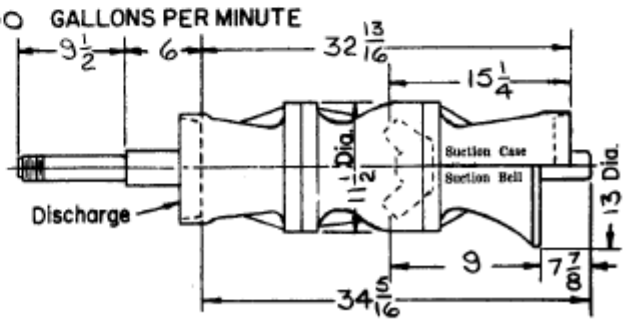

For additional stages add 12 per stage.

Impeller shaft diameter	1.75	Column pipe	10 / 8
Minimum impeller shaft end play	.813	Suction pipe	10

VERTICAL TURBINE PUMP DIVISION, DENVER, COLORADO
Litho'd in U.S.A.