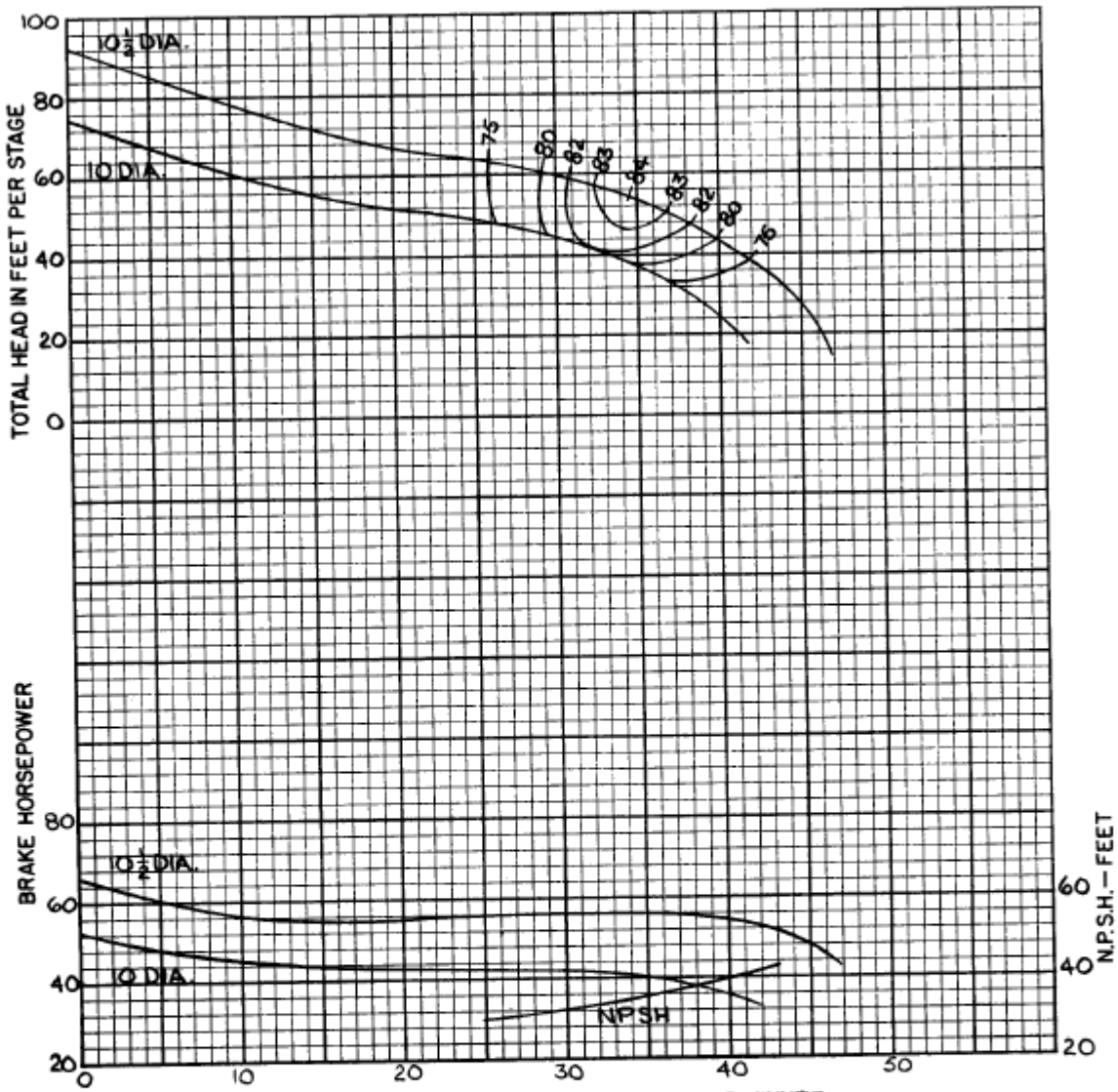

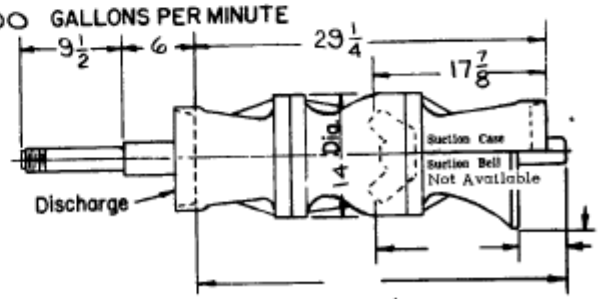

For additional stages add $15\frac{1}{2}$ per stage.

Efficiency shown is for 3 stages or more, with standard materials. For fewer stages or other materials change efficiency as shown.

No. of stages	Eff. change	MATERIAL	Eff. change
6	—	Impeller–bronze	—
5	—	Impeller–c.i.	-1
4	—	Impeller–c.i. enm.	+1
3	—	Bowl–c.i. enm.	+1
2	-1	Bowl–cast iron	—
1	-2	Bowl–bronze	—

Standard materials	
Impeller – bronze	
Bowl – cast iron	
Thrust factor	20
Rotor wt. per stage (lbs.)	35
Bowl wt. 1st stage (lbs.)	445
Bowl wt. add'l. stage (lbs.)	185
Max. bowl horsepower	360
Impeller eye area (sq. in.)	47.1

Impeller shaft diameter	2	Column pipe	12
Minimum impeller shaft end play	.5	Suction pipe	12

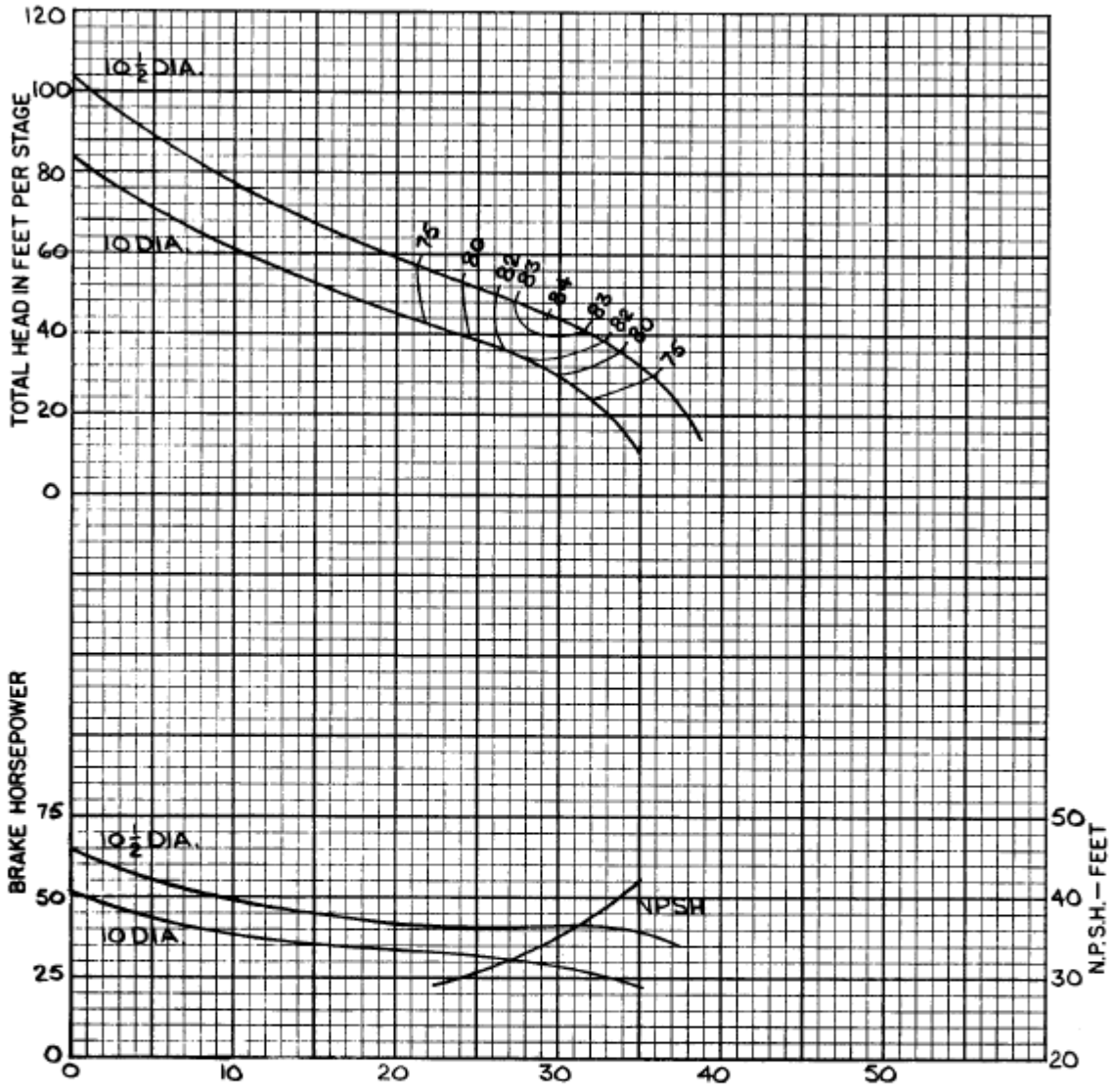

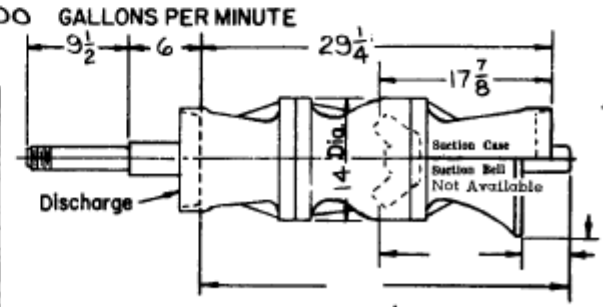

For additional stages add 15½ per stage.

Efficiency shown is for 3 stages or more, with standard materials. For fewer stages or other materials change efficiency as shown.

No. of stages	Eff. change	MATERIAL	Eff. change
6	—	Impeller–bronze	—
5	—	Impeller–c.i.	-1
4	—	Impeller–c.i. enm.	+1
3	—	Bowl–c.i. enm.	+1
2	-1	Bowl–cast iron	—
1	-2	Bowl–bronze	—

Standard materials	
Impeller – bronze	
Bowl – cast iron	
Thrust factor	20
Rotor wt. per stage (lbs.)	35
Bowl wt. 1st stage (lbs.)	445
Bowl wt. add'l. stage (lbs.)	185
Max. bowl horsepower	360
Impeller eye area (sq. in.)	45.6

Impeller shaft diameter	2	Column pipe	12	
Minimum impeller shaft end play	.75	Suction pipe	12	