Customer _____ Worthington S.O. _____
Project _____ Proposal/Order No. _____
Cust. Proposal/Order No. _____ Certified By _____
Customer Item No. _____ Date _____

Liquid/Service _____ Sp. Gr. _____ Visc. _____ SSU
Capacity _____ Head _____ Temp. _____ °F/°C Consistency _____ %

WORTHINGTON PUMP PERFORMANCE DATA

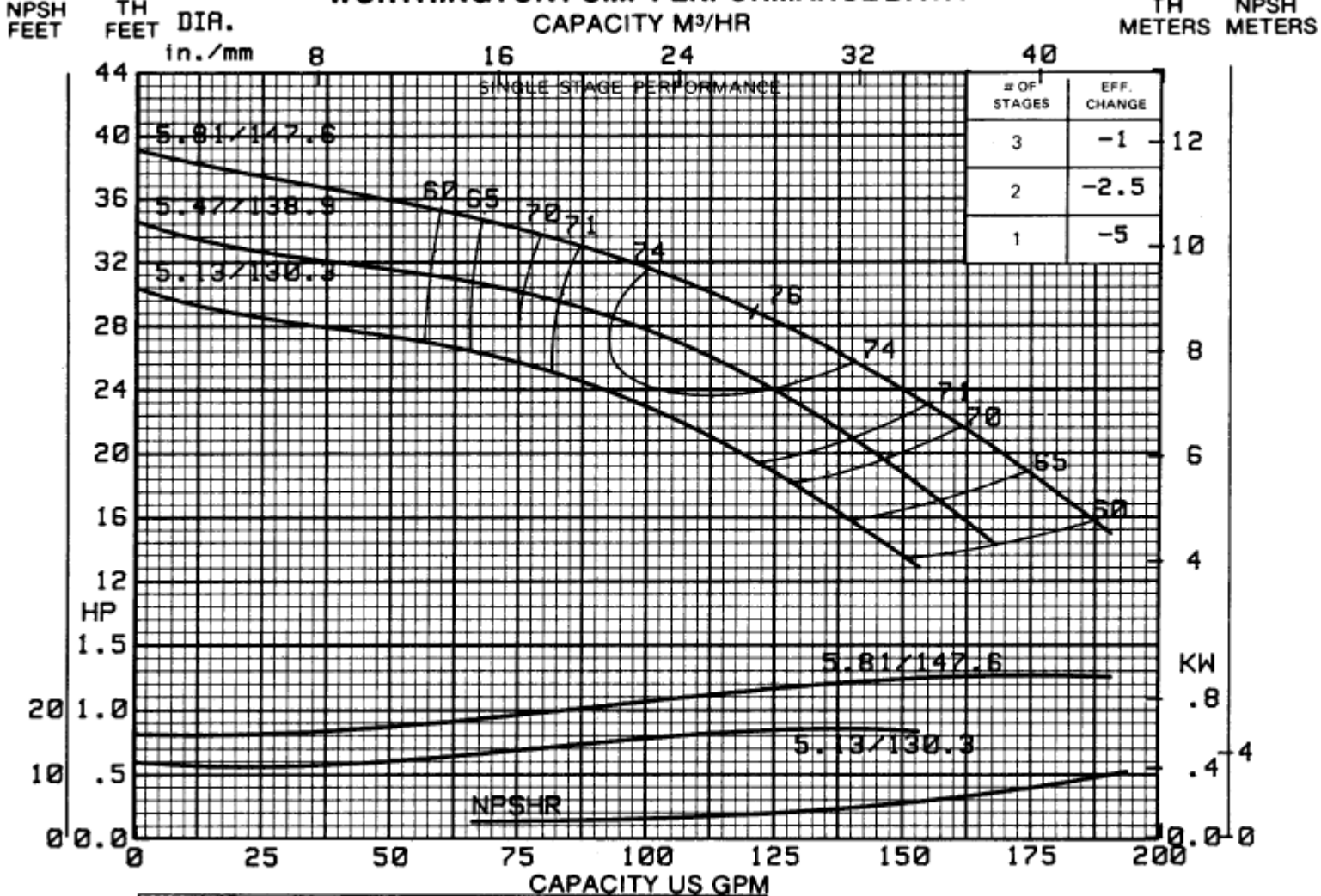

# OF STAGES	EFF. CHANGE
3	-1
2	-2.5
1	-5

CURVE NO.	SIZE	RPM
A-24012	8L12	1760

RATING CURVES
(60 CYCLE)

8L-12
1760 RPM

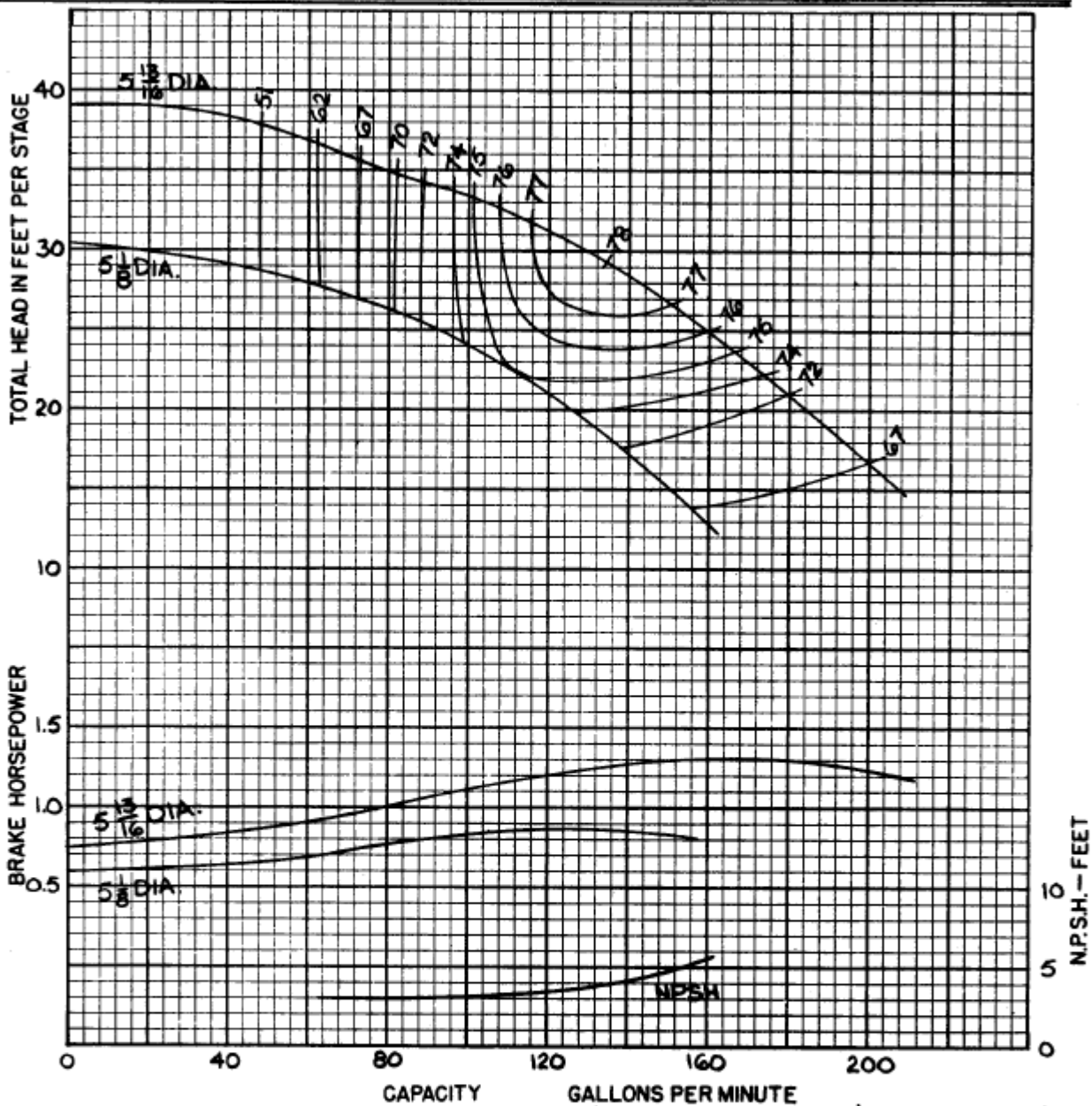

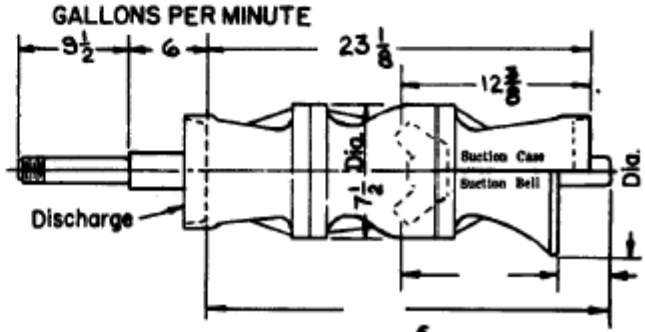

For additional stages add $5\frac{6}{8}$ per stage.

Efficiency shown is for 7 stages or more, with standard materials. For fewer stages or other materials change efficiency as shown.

No. of stages	Eff. change	MATERIAL	Eff. change
6	-.5	Impeller-bronze	—
5	-.75	Impeller-c.i.	-1
4	-1	Impeller-c.i. enm.	+2
3	-2	Bowl-c.i. enm.	—
2	-3.5	Bowl-cast iron	-3.5
1	-5	Bowl-bronze	-3

Standard materials	
Impeller — bronze	
Bowl — cast iron / enamelled	
Thrust factor	3.1
Rotor wt. per stage (lbs.)	10
Bowl wt. 1st stage (lbs.)	80
Bowl wt. add'l. stage (lbs.)	40
Max. bowl horsepower	80
Impeller eye area (sq. in.)	4.7

Impeller shaft diameter	1.25	Column pipe	4
Minimum impeller shaft end play	.438	Suction pipe	4